intertek
Total Quality. Assured.

ilac-MRA IAS ACCREDITED Testing Laboratory
TL-1195

Foshan DTOP Window and Doors Co., Ltd.

TEST REPORT

SCOPE OF WORK
WINDOWS AND DOORS

REPORT NUMBER
260121006GZC-001

ISSUE DATE
2026/6/16

PAGES
18

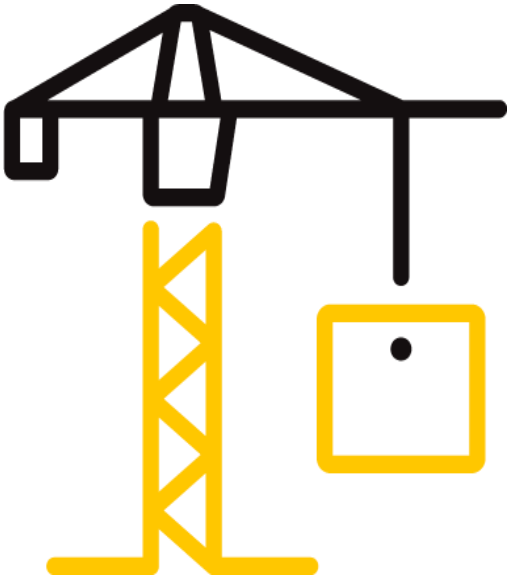

Intertek Testing Services Shenzhen Ltd. Guangzhou Branch

DOCUMENT CONTROL NUMBER
TTRF_AAMA 101_b
Effective date: 2024-3-1
© 2024 Intertek

Intertek Testing Services Shenzhen Ltd. Guangzhou Branch
C2-1, Heping Xu, Yongning Street, Zengcheng District, Guangzhou, China
Tel: 020-82139668 Fax: 020-32157538
Website: www.intertek.com

Test Report

Issue Date: 2026/6/16 Intertek Report No. : 260121006GZC-001

Applicant:	Foshan DTOP Window and Doors Co., Ltd.
Address:	Factory Building No. 2 (self-numbered) next to Fumin Third Road, Guanyao Hongsha Development Zone, Shishan Town, Nanhai District, Foshan City (registered address)
Attn:	info@dtpalumn.com

Manufacturer:	Foshan DTOP Window and Doors Co., Ltd.
Address:	Factory Building No. 2 (self-numbered) next to Fumin Third Road, Guanyao Hongsha Development Zone, Shishan Town, Nanhai District, Foshan City (registered address)
Attn:	info@dtpalumn.com

Primary designator:	Class CW - PG30: Size Tested 1500mm × 1500mm (59.06in. × 59.06in.) - Type FW
Secondary designator:	Positive Design Pressure = +1440 Pa (+30.08 psf) Negative Design Pressure = -1440 Pa (-30.08 psf) Water penetration resistance test pressure = 220 Pa (4.59 psf) Canadian Air Infiltration/Exfiltration = Fixed level

SUBJECT: Performance testing
< Fixed window >

Dear Sir,

This test report for represents the results of our evaluation of the above referenced product(s) to the requirements contained in the following standards:

TEST METHODS AND STANDARDS
AAMA/WDMA/CSA 101/I.S.2/A440-17 (NAFS 2017 - North American Fenestration Standard / Specification for Windows, Doors and Skylights) CSA A440S1-19 (Canadian Supplement to AAMA/WDMA/CSA 101/I.S.2/A440-17)

SAMPLE ID	MODEL	SPECIFICATION
S260121006GZU.001	120 series	1500 mm (Width) × 1500 mm (Height) × 120 mm (Thickness)

SAMPLE RECEIVED: 2026/2/5
TESTED FROM: 2026/2/5 TO 2026/4/24

TEST LOCATION: C2-1, Heping Xu, Yongning Street, Zengcheng District, Guangzhou, China

****
This report is for the exclusive use of Intertek's Client and is provided pursuant to the agreement between Intertek and its Client. Intertek's responsibility and liability are limited to the terms and conditions of the agreement. Intertek assumes no liability to any party, other than to the Client in accordance with the agreement, for any loss, expense or damage occasioned by the use of this report. Only the Client is authorized to permit copying or distribution of this report and then only in its entirety. Any use of the Intertek name or one of its marks for the sale or advertisement of the tested material, product or service must first be approved in writing by Intertek. The observations and test results in this report are relevant only to the sample tested. This report by itself does not imply that the material, product, or service is or has ever been under an Intertek certification program. All the test results if need to give the statement of conformity refer to the decision rule of ILAC G8:09/2019 Clause 4.2.1"Binary Statement for Simple Acceptance Rule".

Intertek Testing Services Shenzhen Ltd. Guangzhou Branch
C2-1, Heping Xu, Yongning Street, Zengcheng District, Guangzhou, China
Tel: 020-82139668 Fax: 020-32157538
Website: www.intertek.com

Test Report

Issue Date: 2026/6/16 Intertek Report No. : 260121006GZC-001

Test Items, Method and Results：

1 Test Sample

Sample was submitted to Intertek directly from the client. Sample was not independently selected for testing. Sample was received at the Evaluation Center on February 5, 2026.
A full scale sample of Fixed window (Model: 120 series) was provided by the manufacturer that was not weathered nor conditioned.
The description of the sample given below has been prepared from information provided by the sponsor of the test. All values quoted are nominal, unless tolerances are given.

Table 1 Product Information

Product Name	Fixed window
Model	120 series
Dimension of Window Frame	1500 mm (Width) x 1500 mm (Height) x 120 mm (Thickness)
Dimension of Window Sash	Not applicable
Aluminum Profile	Model: TJ120-01; TJ120-04; TJ120-05; TJ120-06 Material: 6063-T5 Manufacturer: Foshan Chenjie Aluminum Co., Ltd.
Frame Corner Construction Details	45° Mitre-cut, assembly with corners keys and Glued
Reinforcement	Not applicable
Glazing	Dimension: 1413 mm (Width) x 1413mm (Height) Structure: 34 mm thick, 8 mm +18Air+8 mm Low-e Tempered Insulating Glass Supplier: Guangdong Honghua Glass Technology Co., Ltd
Hardware	Not applicable
Weather-strip	Not applicable
Thermal Break	Model: CG20 Material: PA66GF25 Nylon insulation strip Supplier: Foshan Forest Wind Plastic Technology Co., Ltd
Drainage	Not applicable
Gasket	Not applicable
Sealant of Glass	Model: 563 Neutral silicone sealant Material: Silicone sealant Supplier: Chengdu Guibao Science and Technology Co.,LTD
Installation	The rough opening allowed for a 1/4" shim space. The exterior perimeter of the test specimen was sealed with silicone sealant.

The sample ID number was S260121006GZU.001. The drawings of the representative sample were referenced in Appendix A, the test data was referenced in Appendix B and the photo of the representative sample was referenced in Appendix C.

Intertek Testing Services Shenzhen Ltd. Guangzhou Branch
C2-1, Heping Xu, Yongning Street, Zengcheng District, Guangzhou, China
Tel: 020-82139668 Fax: 020-32157538
Website: www.intertek.com

Test Report

Issue Date: 2026/6/16 Intertek Report No. : 260121006GZC-001

Test Items, Method and Results：

2 Test Result

Table 2 Test Result

Test Description	Requirements (Class CW-PG30)		Results		Verdict
Air Leakage Resistance Test	Maximum air leakage at +75 Pa	0.2 L/s·m^2	Air leakage at +75 Pa	0.17 L/s·m^2	Pass
	Maximum air leakage at -75 Pa	0.2 L/s·m^2	Air leakage at -75 Pa	0.18 L/s·m^2	
Water Penetration Resistance Test	Minimum water pressure	220 Pa	Test Pressure	220 Pa	Pass
			No water penetration occurred after testing at 220Pa by the method of cyclic static air pressure difference.		
Uniform Load Deflection Test	Design Pressure (DP)	1440 Pa	Test Pressure	1440 Pa	Pass
			Maximum deflection at jamb	0.3 mm	
			Maximum deflection at bottom rail	0.3 mm	
			Maximum deflection at glazing(For reference)	3.4 mm	

Intertek Testing Services Shenzhen Ltd. Guangzhou Branch
C2-1, Heping Xu, Yongning Street, Zengcheng District, Guangzhou, China
Tel: 020-82139668 Fax: 020-32157538
Website: www.intertek.com

Test Report

Issue Date: 2026/6/16 Intertek Report No. : 260121006GZC-001

Table 2 Test Result (Cont.)

Test Description	Requirements (Class CW-PG30)		Results		Verdict
Uniform Load Structural Test	Structural Test Pressure (STP)	2160 Pa	Test Pressure	2160 Pa	Pass
			After the test loads were released, there was no disengagement or non-superficial cracking of the sash, frame, or glazing. There was no permanent deformation which was in excess of 0.3% of its span.		
			Maximum permanent deflection at jamb	<0.1 mm	
			Maximum permanent deflection at bottom rail	<0.1 mm	
			Maximum permanent deflection at glazing (For reference)	0.1 mm	
Forced-entry Resistance Test	Minimum Grade 10		Test Class	Grade 10	Pass
			After test, there was no opening which allows for entrance through the tested specimen.		

Test Report

Issue Date: 2026/6/16 Intertek Report No. : 260121006GZC-001

Appendix A: Sample Drawings

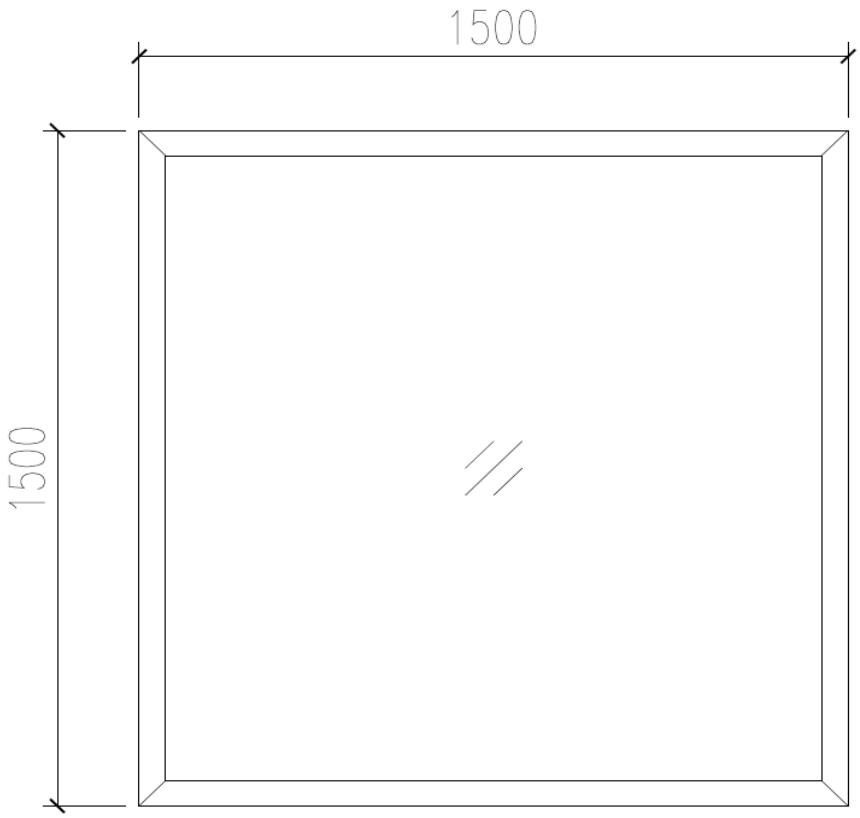

Fig.1 Drawing of Representative Sample

Test Report

Issue Date: 2026/6/16 Intertek Report No. : 260121006GZC-001

Appendix A: Sample Drawings (Cont.)

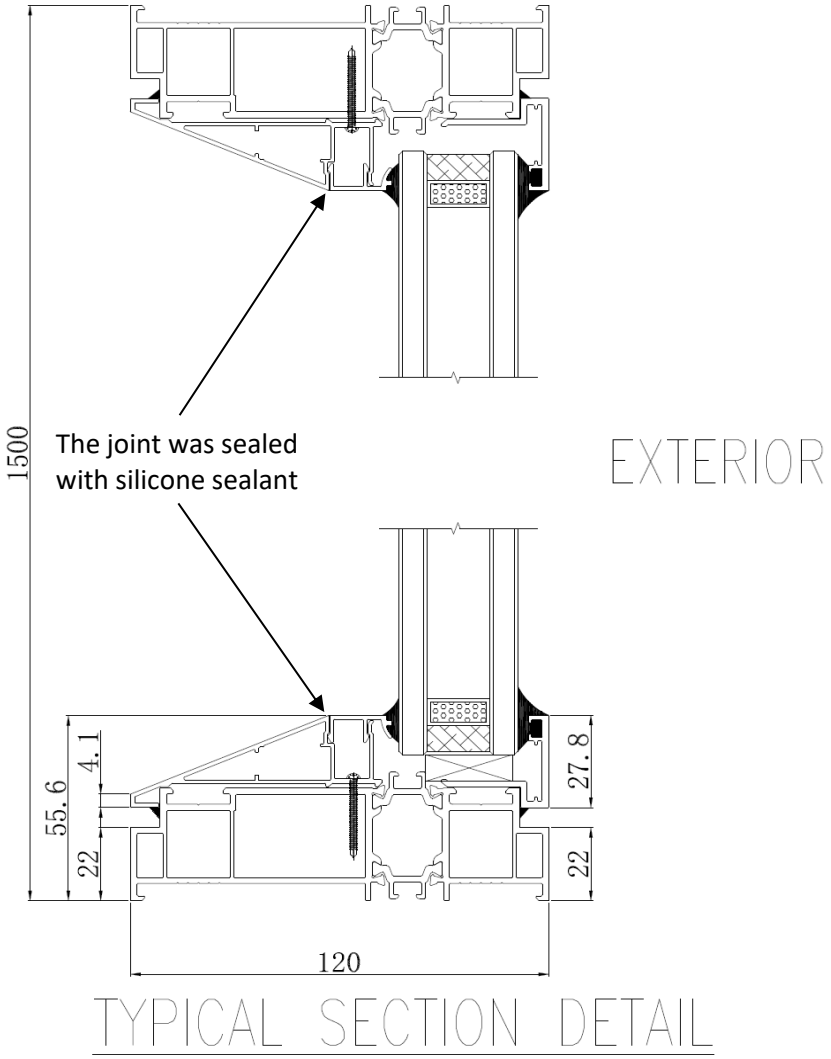

Fig.2 Drawing of Representative Sample

Test Report

Issue Date: 2026/6/16 Intertek Report No. : 260121006GZC-001

Appendix A: Sample Drawings (Cont.)

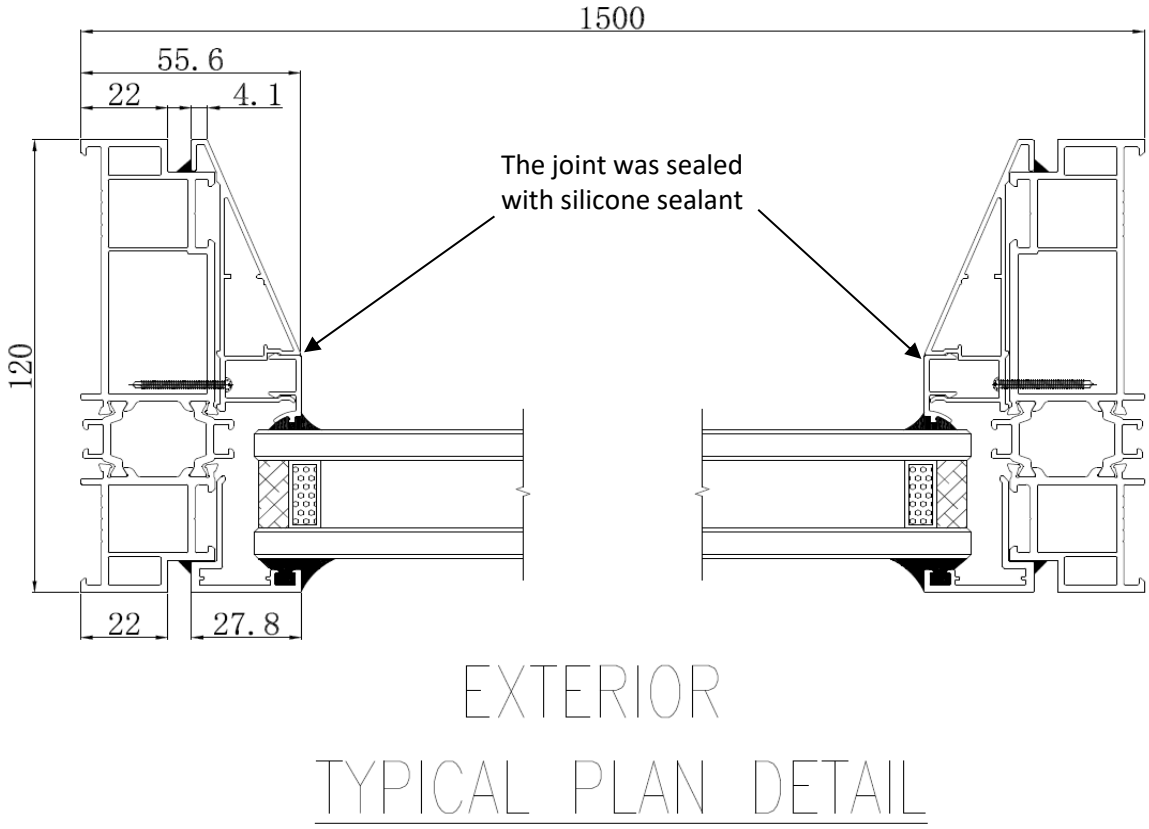

Fig.3 Drawing of Representative Sample

Test Report

Issue Date: 2026/6/16 Intertek Report No. : 260121006GZC-001

Appendix A: Sample Drawings (Cont.)

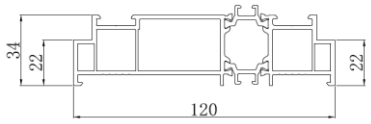	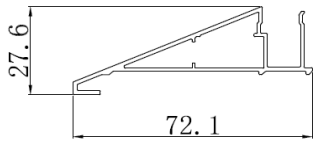	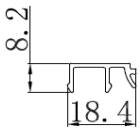
TJ120-01	TJ120-04	TJ120-05
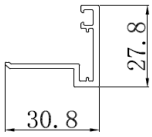		
TJ120-06		

Fig.4 Drawing of profile section

Test Report

Issue Date: 2026/6/16 Intertek Report No. : 260121006GZC-001

Appendix A: Sample Drawings (Cont.)

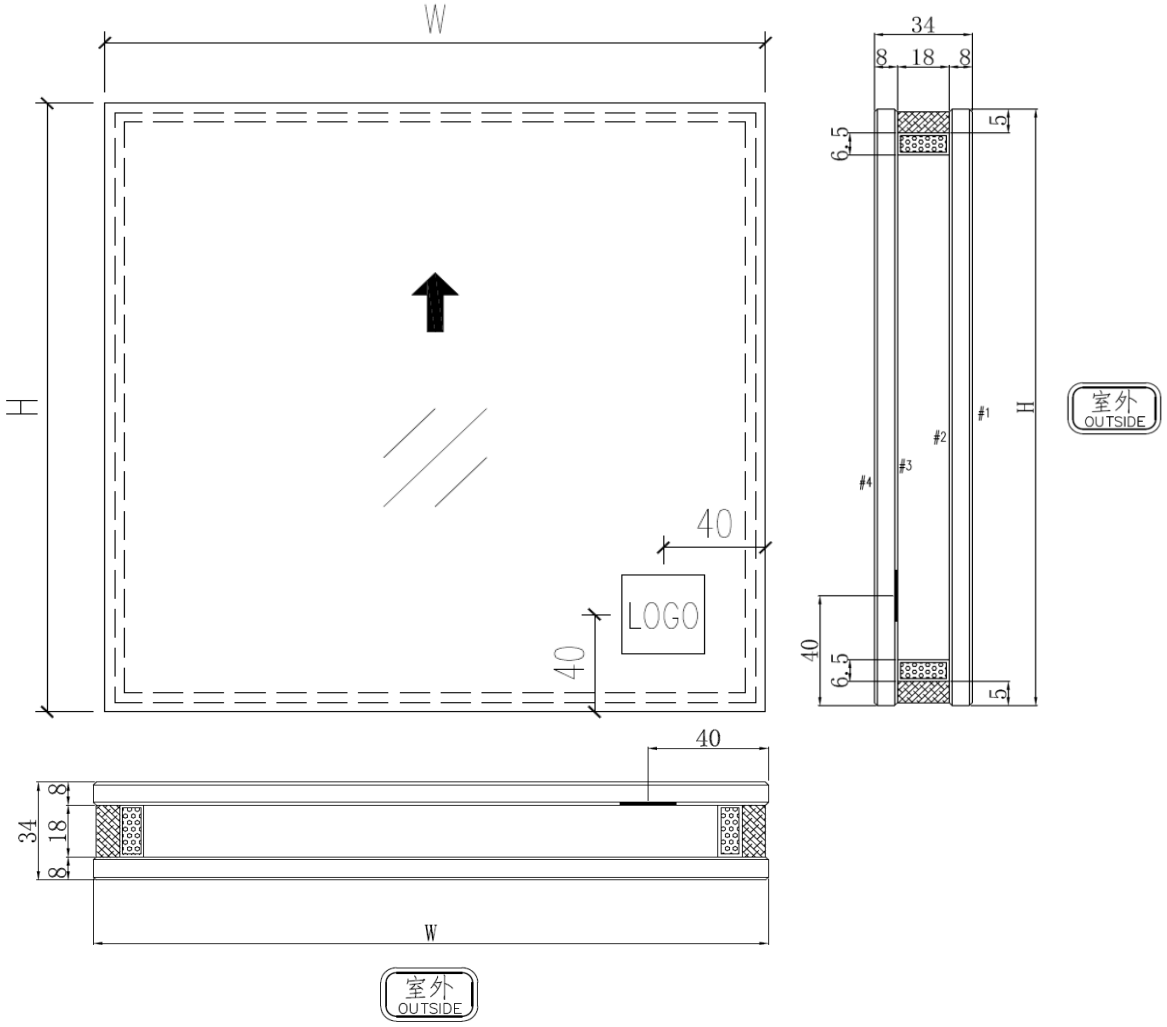

Fig.5 Drawing of glazing

Test Report

Issue Date: 2026/6/16 Intertek Report No. : 260121006GZC-001

Appendix B: Test Data

B.1 Air Leakage Resistance Test – Test method: ASTM E283/E283M-2019

Total area: 2.25 m^2 (24.22 ft^2)

Table B.1 Test Data of Air Leakage Resistance Test

	Air Leakage in cfm/ft^2	Air Leakage in $L/s{\cdot}m^2$
Infiltration rate (75 Pa)	0.033	0.17
Exfiltration rate (75 Pa)	0.035	0.18
Average air leakage rate (75 Pa)	0.034	0.18

The tested specimen met the requirements of Air Leakage Resistance Test as per AAMA/WDMA/CSA 101/I.S.2/A440-17 and CSA A440S1-19.

Test Report

Issue Date: 2026/6/16 Intertek Report No. : 260121006GZC-001

Appendix B: Test Data

B.2 Water resistance test – Test method ASTM E547-2000(R2016)

No water penetration occurred at 220Pa by the method of cyclic static air pressure difference during and after test according to ASTM E547-2000(R2016).

The tested specimen met the requirements of Class CW-PG30 for Water Penetration Resistance Test as per AAMA/WDMA/CSA 101/I.S.2/A440-17 and CSA A440S1-19.

Test Report

Issue Date: 2026/6/16 Intertek Report No. : 260121006GZC-001

Appendix B: Test Data

B.3 Uniform Load Deflection Test – Test method ASTM E330/E330M-2014, Procedure A

Span length, L1 =	1420 mm	(	Point: #1-3 for	Jamb	)
Span length, L2 =	1410 mm	(	Point: #3-5 for	Bottom rail	)
Span length, L2 =	1350 mm	(	Point: #6-8 for	Glazing	)

Test Pressure (DP), P = 1440 Pa

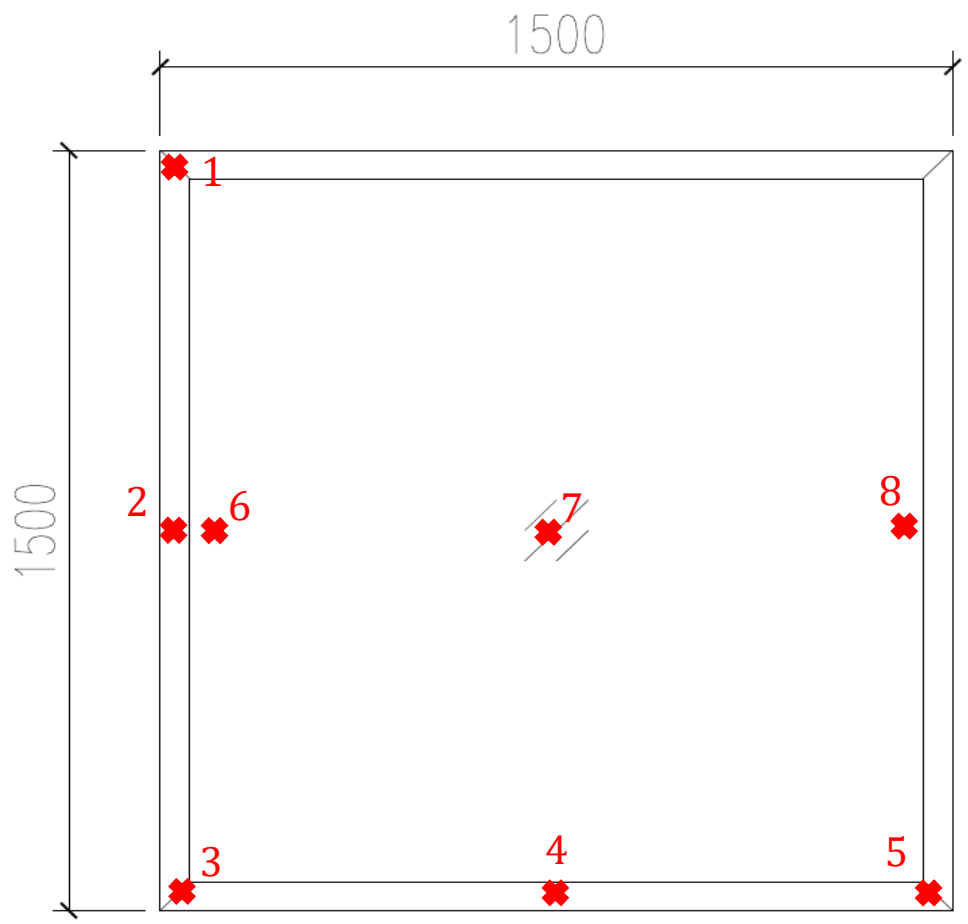

Fig.6 Locations of Displacement Measuring Devices

Intertek Testing Services Shenzhen Ltd. Guangzhou Branch
C2-1, Heping Xu, Yongning Street, Zengcheng District, Guangzhou, China
Tel: 020-82139668 Fax: 020-32157538
Website: www.intertek.com

Test Report

Issue Date: 2026/6/16 Intertek Report No. : 260121006GZC-001

B.4 Uniform Load Deflection Test – Test method ASTM E330/E330M-2014, Procedure A (Cont.)

Table B.2 Test Data of Uniform Load Deflection Test

Member (mm)		Test Pressure (Pa)	Displacement (mm)			Deflection
Item	Span Length		1	2	3	
Jamb	1420	+P = +1440	0.0	0.2	0.1	0.2
		0	0.0	0.1	0.1	0.1
		-P = -1440	0.0	0.3	0.1	0.3
		0	0.0	0.2	0.1	0.2
Member (mm)		Test Pressure (Pa)	Displacement (mm)			Deflection
Item	Span Length		3	4	5	
Bottom rail	1410	+P = +1440	0.1	0.4	0.2	0.3
		0	0.1	0.1	0.1	<0.1
		-P = -1440	0.1	0.4	0.2	0.3
		0	0.1	0.1	0.0	0.1
Member (mm)		Test Pressure (Pa)	Displacement (mm)			Deflection
Item	Span Length		6	7	8	
Glazing	1350	+P = +1440	0.6	4.1	0.8	3.4
		0	0.3	0.2	0.2	0.1
		-P = -1440	0.8	4.1	1.1	3.2
		0	0.1	0.1	0.1	<0.1

Intertek Testing Services Shenzhen Ltd. Guangzhou Branch
C2-1, Heping Xu, Yongning Street, Zengcheng District, Guangzhou, China
Tel: 020-82139668 Fax: 020-32157538
Website: www.intertek.com

Test Report

Issue Date: 2026/6/16 Intertek Report No. : 260121006GZC-001

B.5 Uniform Load Deflection Test – Test method ASTM E330/E330M-2014, Procedure A (Cont.)

Table B.3 Test Data of Uniform Load Deflection Test for Jamb

Test Pressure	Positive		Negative	
	Deflection	Perm. Set	Deflection	Perm. Set
Measurements, mm	0.2	0.1	0.3	0.2
Deflection limit at design pressure, L1/175=8.11 mm				

Table B.4 Test Data of Uniform Load Deflection Test for Bottom rail

Test Pressure	Positive		Negative	
	Deflection	Perm. Set	Deflection	Perm. Set
Measurements, mm	0.3	<0.1	0.3	0.1
Deflection limit at design pressure, L2/175=8.06 mm				

Table B.5 Test Data of Uniform Load Deflection Test for Glazing

Test Pressure	Positive		Negative	
	Deflection	Perm. Set	Deflection	Perm. Set
Measurements, mm	3.4	0.1	3.2	<0.1
Deflection is only for reference.				

During each load, no main frame or sash member deflected more than L/175, where L is the length of the unsupported span. And no damage was found.

The tested specimen met the requirements for Class CW-PG30 for Uniform Load Deflection Test as per AAMA/WDMA/CSA 101/I.S.2/A440-17 and CSA A440S1-19.

Intertek Testing Services Shenzhen Ltd. Guangzhou Branch
C2-1, Heping Xu, Yongning Street, Zengcheng District, Guangzhou, China
Tel: 020-82139668 Fax: 020-32157538
Website: www.intertek.com

Test Report

Issue Date: 2026/6/16 Intertek Report No. : 260121006GZC-001

Appendix B: Test Data

B.6 Uniform Load Structural Test – Test method ASTM E330/E330M-2014, Procedure A

Design Pressure, P = 1440 Pa ; Structural Pressure, P = 2160 Pa

Table B.6 Test Data of Uniform Load Structural Test

Member (mm)		Test Pressure (Pa)	Permanent deformation(mm)			Net permanent deformation (mm)
Item	Span Length		1	2	3	
Jamb	1420	+P = +2160	—	—	—	—
		0	0.1	0.1	0.1	<0.1
		-P = -2160	—	—	—	—
		0	0.1	0.1	0.1	<0.1
Member (mm)		Test Pressure (Pa)	Permanent deformation(mm)			Net permanent deformation (mm)
Item	Span Length		3	4	5	
Bottom rail	1410	+P = +2160	—	—	—	—
		0	0.1	0.1	0.1	<0.1
		-P = -2160	—	—	—	—
		0	0.1	0.1	0.1	<0.1
Member (mm)		Test Pressure (Pa)	Permanent deformation(mm)			Net permanent deformation (mm)
Item	Span Length		6	7	8	
Glazing	1350	+P = +2160	—	—	—	—
		0	0.2	0.2	0.1	0.1
		-P = -2160	—	—	—	—
		0	0.1	0.1	0.1	<0.1

Intertek Testing Services Shenzhen Ltd. Guangzhou Branch
C2-1, Heping Xu, Yongning Street, Zengcheng District, Guangzhou, China
Tel: 020-82139668 Fax: 020-32157538
Website: www.intertek.com

Test Report

Issue Date: 2026/6/16 Intertek Report No. : 260121006GZC-001

B.6 Uniform Load Structural Test – Test method ASTM E330/E330M-2014, Procedure A

Table B.7 Test Data of Uniform Load Structural Test for Jamb

Test Pressure	Perm. Set	
	Positive	Negative
Measurements, mm	<0.1	<0.1
Permanent deflection limit, L1*0.3%=4.26 mm		

Table B.8 Test Data of Uniform Load Structural Test for Bottom rail

Test Pressure	Perm. Set	
	Positive	Negative
Measurements, mm	<0.1	<0.1
Permanent deflection limit, L2*0.3%=4.23 mm		

Table B.9 Test Data of Uniform Load Structural Test for Glazing		
Test Pressure	Perm. Set	
	Positive	Negative
Measurements, mm	0.1	<0.1
Permanent deflection is only for reference.		

After the test loads were released, there was no failure. There was no permanent deformation which was in excess of 0.3% of its span.

The tested specimen met the requirements for Class CW-PG30 for Uniform Load Structural Test as per AAMA/WDMA/CSA 101/I.S.2/A440-17 and CSA A440S1-19.

Test Report

Issue Date: 2026/6/16 Intertek Report No. : 260121006GZC-001

Appendix C: Sample Received Photo

REPORT AUTHORIZED

When signed with physical or electronic signature, the contents of this report have been prepared and approved per Intertek's quality process in accordance with ISO 17025.

Approved by:	**Prepared by:**
Ziqing Chen	Leo. Li
Name: Ziqing Chen	Name: Leo Li
Title: Reviewer	Title: Project Engineer

Revision:

Revision No.	Date	Revision Summary	Author	Reviewer
R0	2026/6/16	Original Report Issue	/	/

End of Test Report