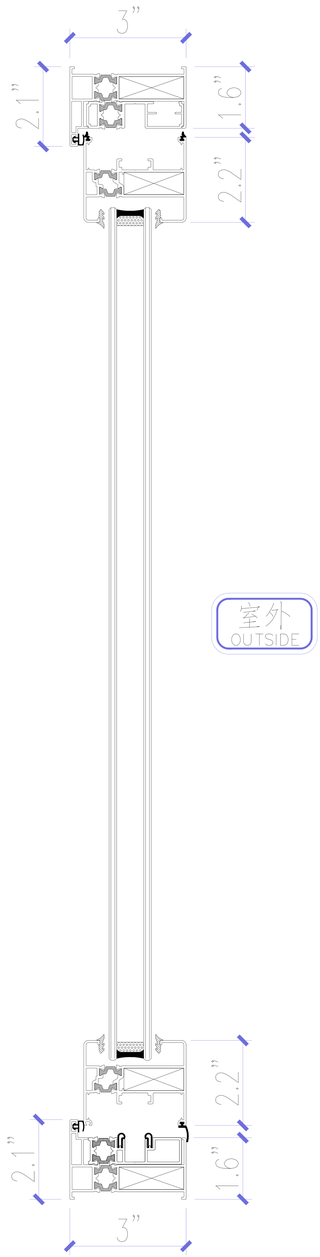

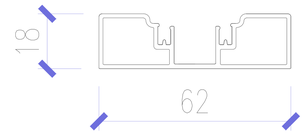

Low orbit

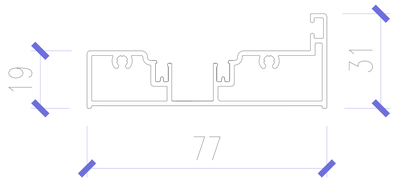

Low rail with flange

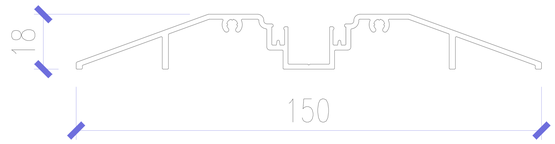
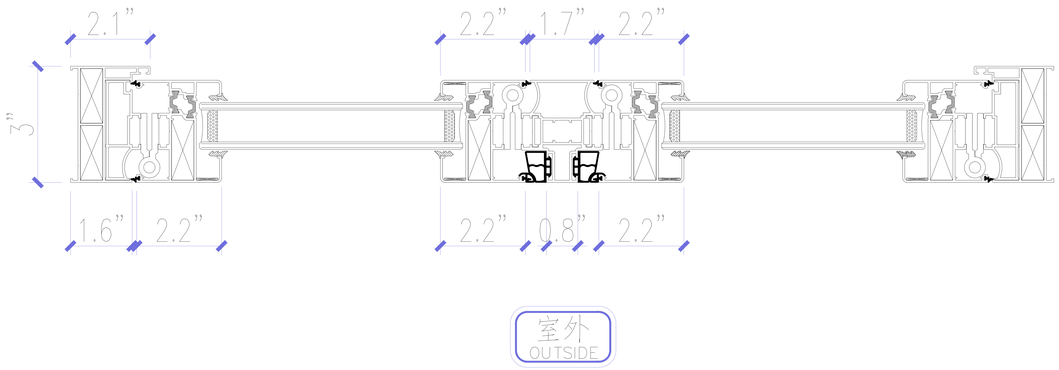
Accessible track